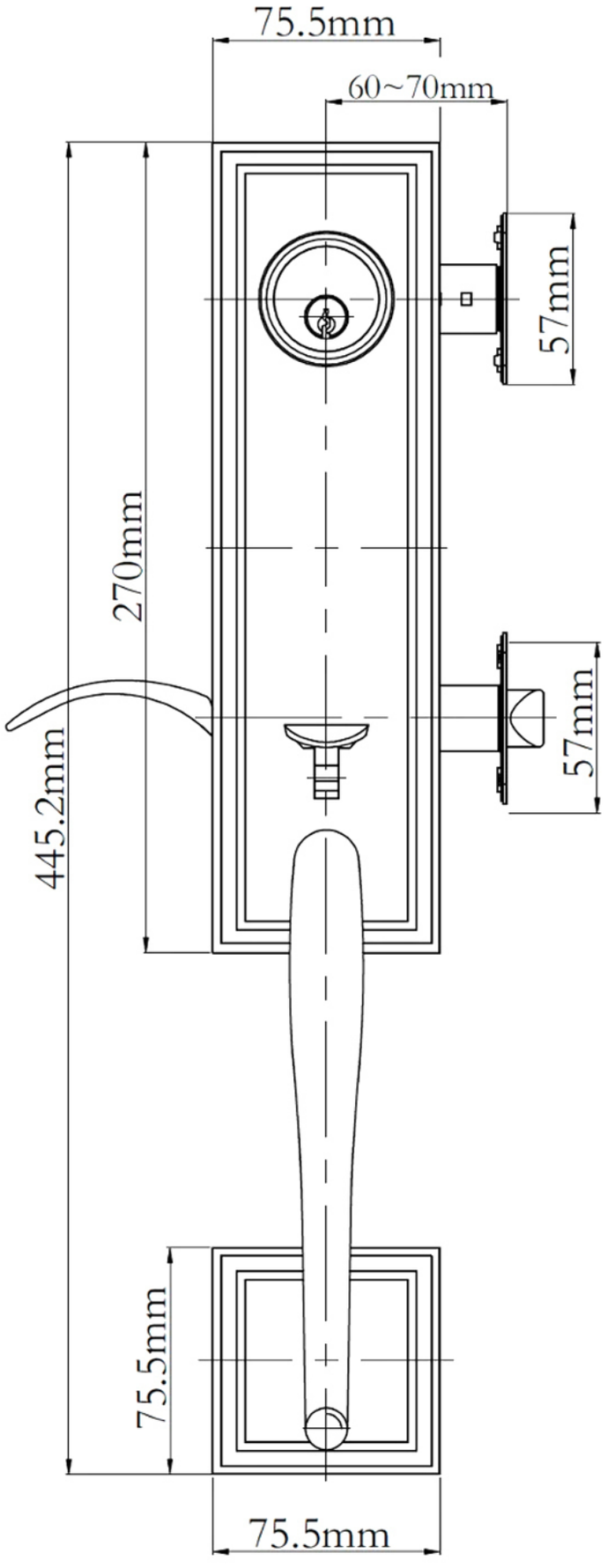
75.5mm
60~70mm
57mm
270mm
57mm
445.2mm
75.5mm
75.5mm

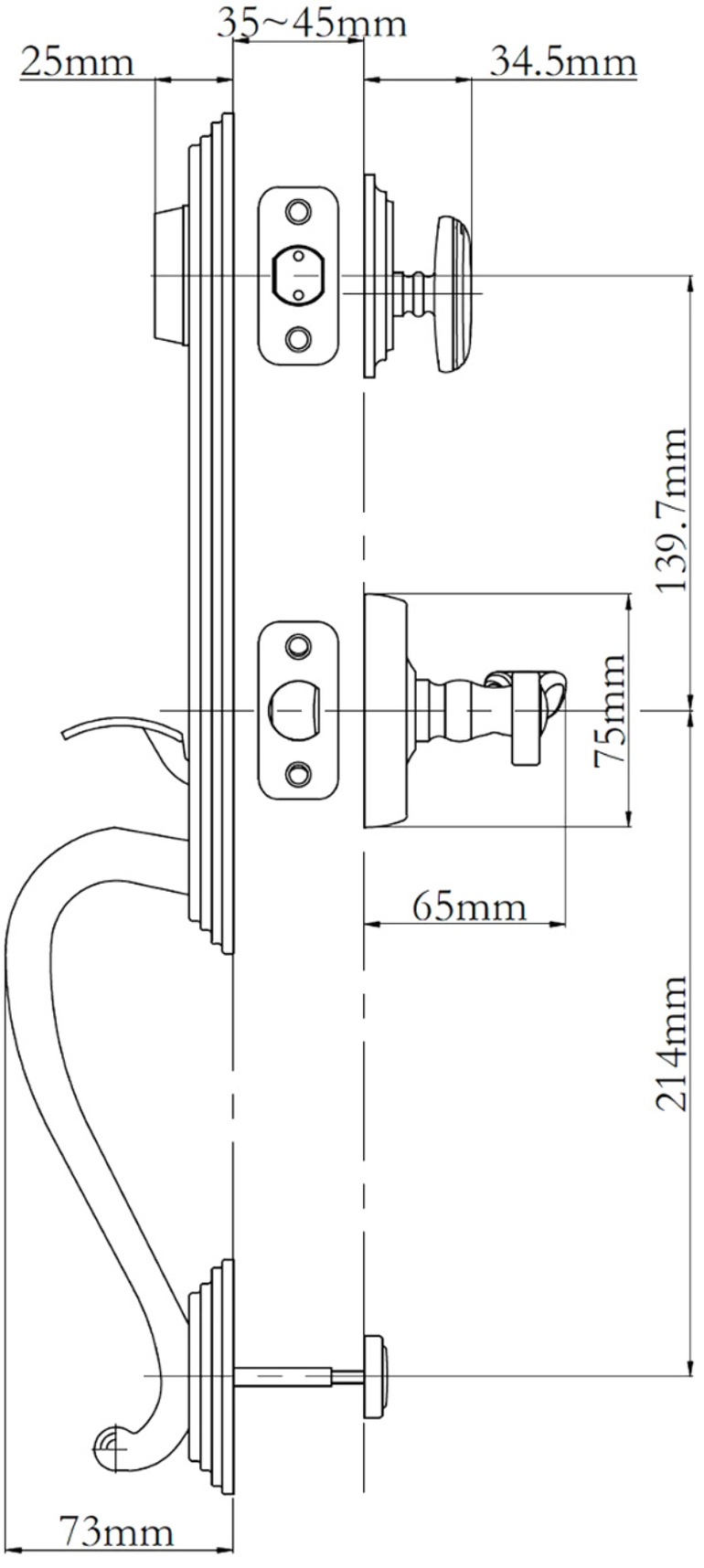
35~45mm
25mm
34.5mm
139.7mm
75mm
65mm
214mm
73mm